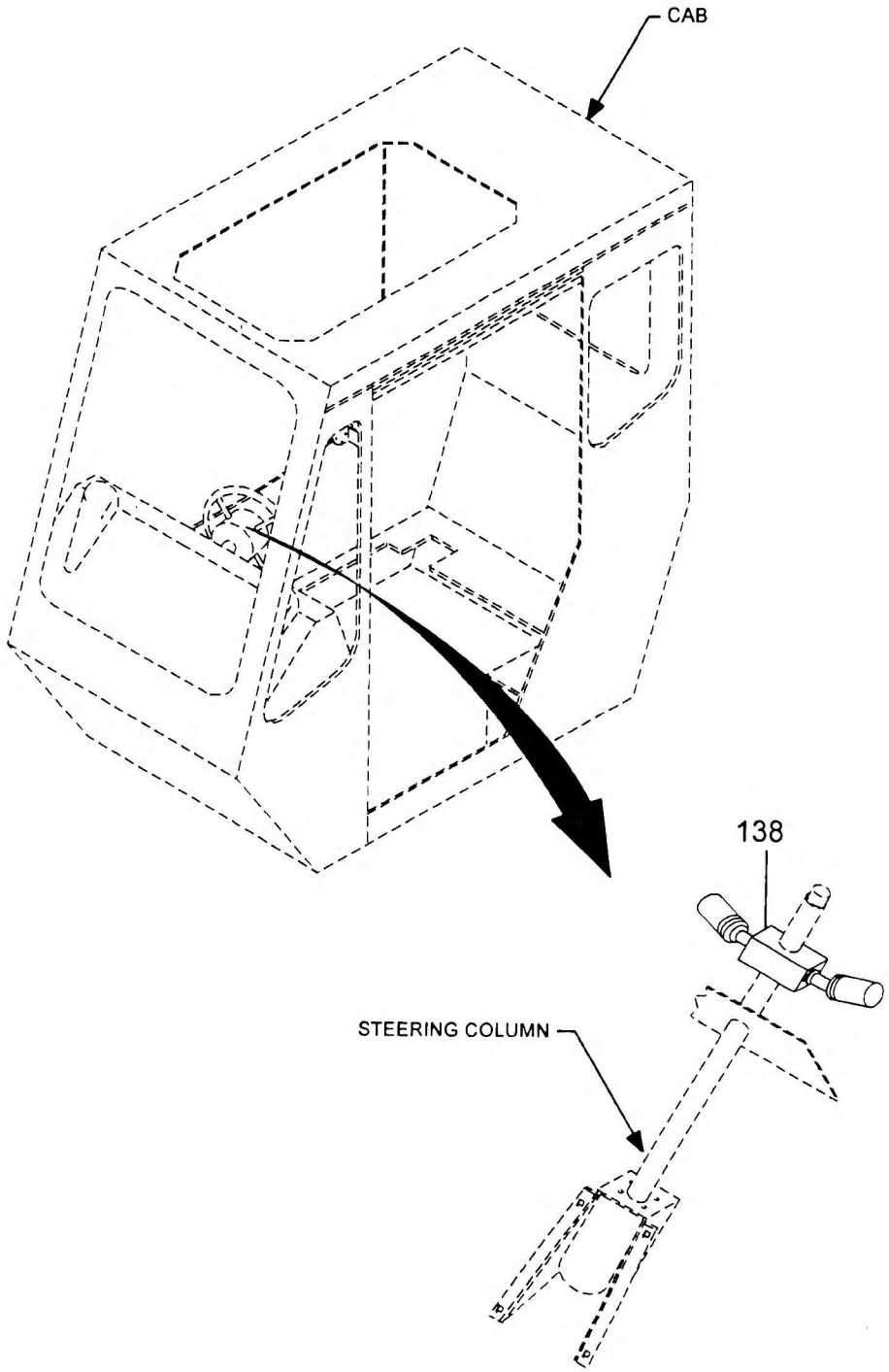

6245100094

(SHEET 1 OF 1)